DATA SHEET

T047-EN-03-Optiflow M²

DESCRIPTION

The Optiflow M² range of solar units is designed to operate drainback solar thermal systems ranging from 25m² to 100m² of collectors.

Advantages :

- «Plug and flow» unit. All technical components are pre-assembled, making it easy to connect the piping, and valves are provided for the installation of the flow/return pipes to the collectors and the flow/return pipes to the storage volume.
- Each installation consists of a basic volume and a possible extension volume to adjust the volume of fluid in the installation.
- The range is available in several versions: with or without heat exchanger, with or without stratification and standard or high height pump, for domestic water or dead water.
- Wall-mounted to save space in the boiler room.
- Protective, insulating and finishing covers in rigid foam for perfect integration with the different elements of the boiler room.

Sunoptimo SA - Chaussée de Marche 940E - 5100 Namur (Belgium) | 0032 81588158 - info@sunoptimo.com

TECHNICAL FEATURES

Components

The Optiflow M unit includes all the technical elements necessary for the operation of a drainback solar installation.

The table on the right shows the main components of the most complete Optiflow M² station with exchanger and stratification valve and «DUO» extension cylinder.

n°	Components
1	Drainback tank (useful volume 64L UNO/ 164L DUO)
2	Filling valve
3	Electronic flowmeter for heat counting (primary)
4	6 bars safety valve
5	Solar pump (standard or high height)
6	Stratification valve (according to selected options)
7	Fluid level indicator in the drainback tank
8	Heat exchanger
9	Secondary pump
10	Electronic flowmeter for heat counting (secondary)

Tab. 1 Optiflow M² components.

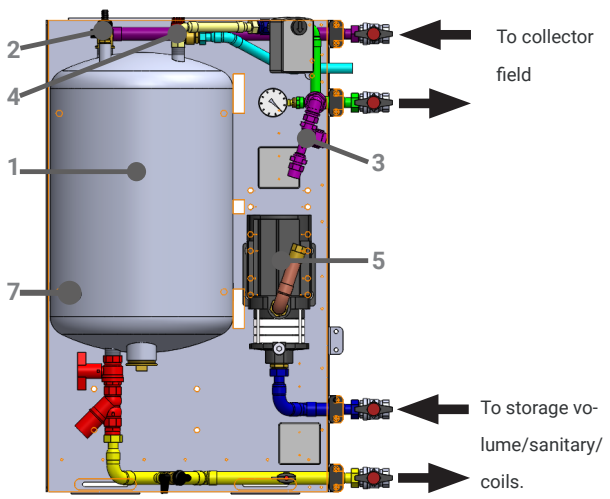

Optiflow M² UNO without heat exchanger, standard pump

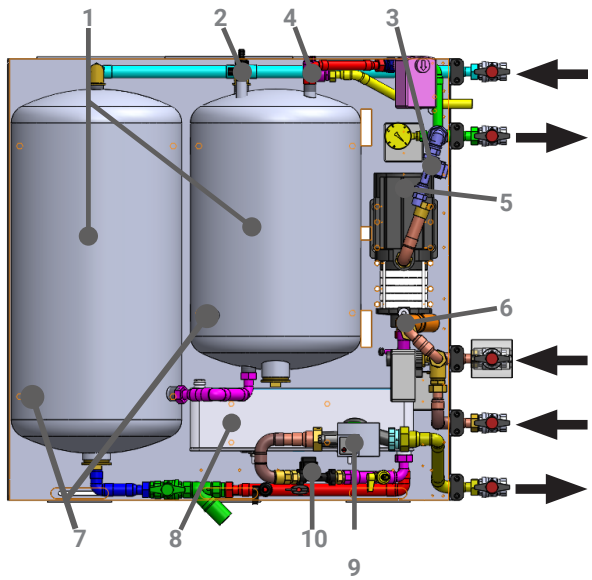

Optiflow M² DUO with heat exchanger and stratification, high height pump

Item code	Exchanger	Secondary pump	Stratification	Primary pump
105.587	No	No	No	Standard
105.600	No	No	No	High height
105.601	Yes	Dead water	No	High height
105.602	Yes	Dead water	No	Standard
105.603	Yes	Dead water	Yes	High height
105.604	Yes	Dead water	Yes	Standard
105.605	Yes	Sanitary water	No	Standard
105.606	Yes	Sanitary water	No	High height
105.607	Yes	Sanitary water	Yes	High height
105.608	Yes	Sanitary water	Yes	Standard

Tab. 2.1 Optiflow M² UNO range

Item code	Exchanger	Secondary pump	Stratification	Primary pump
105.619	No	No	No	Standard
105.620	No	No	No	High height
105.621	Yes	Dead water	No	Standard
105.622	Yes	Dead water	No	High height
105.623	Yes	Dead water	Yes	Standard
105.624	Yes	Dead water	Yes	High height
105.625	Yes	Sanitary water	No	Standard
105.626	Yes	Sanitary water	No	High height
105.627	Yes	Sanitary water	Yes	Standard
105.628	Yes	Sanitary water	Yes	High height

Tab. 2.2 Optiflow M² DUO range

Space requirements

	Height (cm)	Width (cm)	Depth (cm)
Optiflow M² Uno	1160	680	440
Optiflow M² Duo	1160	1100	440

Pump performance

The pump is selected according to two criteria:

- In the priming phase, it must allow the fluid to replace the air contained in the collectors when they are stopped and to overcome the height of the building.
- In the production phase, it must ensure a sufficient flow rate.

The standard pump is used in the case of low heads. For higher heads, the high height pump is installed.

Sizing software for calculating flow rates and pressure drops in the start-up and production phases and for selecting the appropriate station is available on request.

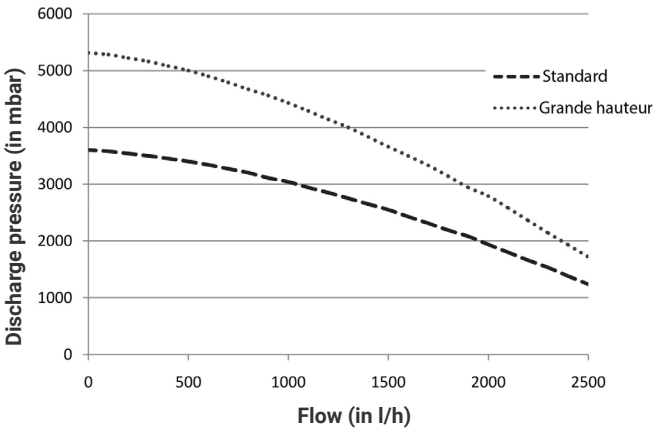

Characteristic curves of different pumps

Drainback tank sizing

The drainback tank is used to collect the solar fluid when the system is off. The fluid leaves the collectors under the effect of gravity and flows back down into the drainback tank of the Optiflow M² unit. When the pump starts up again, the fluid is sent to the collectors and the air that was contained in the pipes and collectors replaces the fluid in the bottle. Sunoptimo solar systems are closed-circuit pressurised systems, so there is no air exchange and therefore no risk of corrosion.
Depending on the number of collectors, the type and length of the pipes, there is more or less fluid to recover. The Optiflow M² range of systems can be adapted to each installation. The UNO stations offer a useful volume of 64 litres, while the DUO stations offer up to 164 litres. The tables on the right will help you to evaluate the volume needed for your project. The sizing software also makes this calculation.

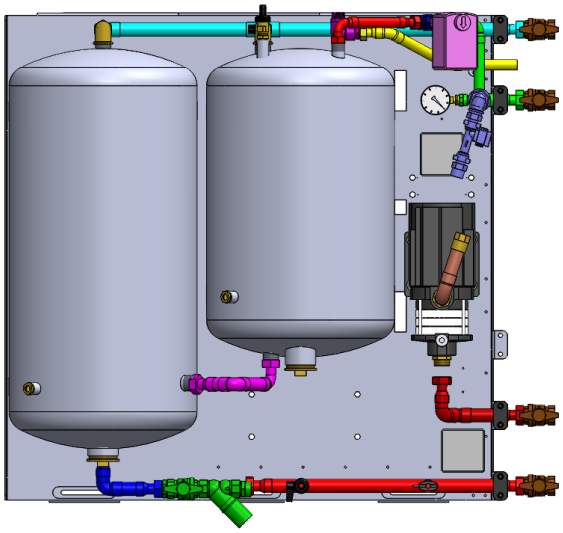

Optiflow M² DUO without heat exchanger, standard pump

Collector type	Capacity (in l)
Optisun 245 H (horizontal)	3,01
Optisun 245 V (vertical)	2,44

Tab. 3 Collector capacity

Piping type	Capacity (in running l/m)
Opticu Ø15	0,14
Opticu Ø18	0,20
CU Ø22 x 1	0,31
CU Ø28 x 1,5	0,49
CU Ø35 x 1,5	0,80
CU Ø42 x 1,5	1,19

Tab. 4 Contenance des différents type de canalisations.

Optiflow with heat exchanger

A heat exchanger can be integrated into Optiflow M² units. The heat exchanger reduces the amount of solar fluid required in the system by eliminating the need for coils in the storage volume. The heat exchanger is used to transfer heat from the primary (solar) loop to the secondary loop. There are two variants, one for dead water and one for domestic water. In the first case, the secondary pump will have a cast iron body, in the second it will be made of stainless steel.

The exchange characteristics are shown in the following graphs. The exchanger will offer a DTlog between 4 and 4.5°K. This represents a good exchange that will allow maximum heat removal.

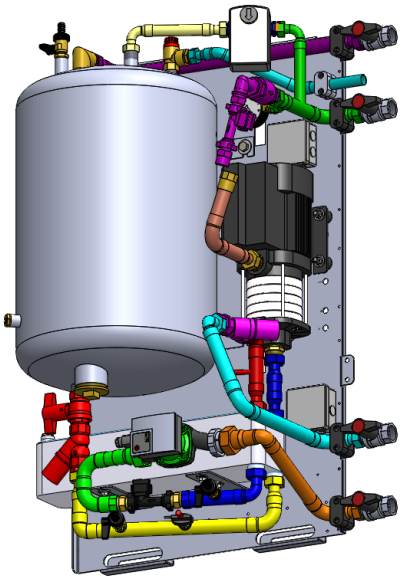

Optiflow M² UNO with heat exchanger, no stratification, high height pump

Optiplate UNO

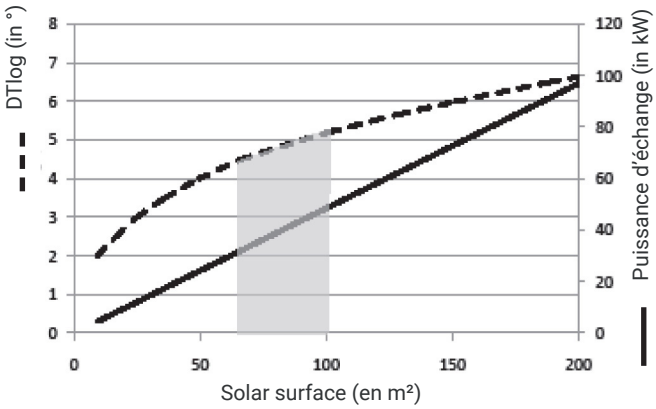

Optiplate DUO

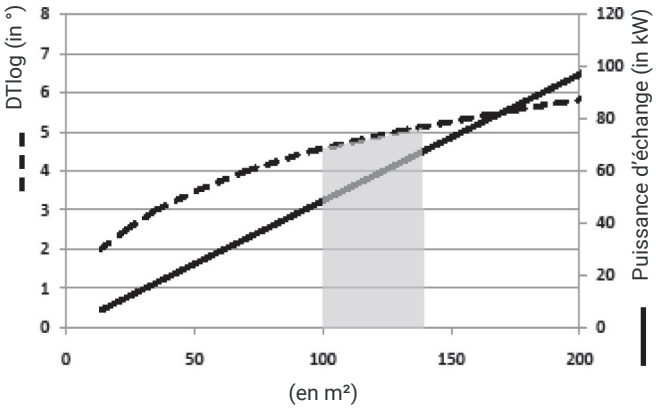

Optiflow with stratification

Stratification allows another tank to be filled first, depending on their temperatures. This optimises the operation of the system. To do this, a 3-way directional valve is pre-mounted to allow stratification of the storage tanks. The station then has an additional outlet to be connected to the tanks according to the hydraulic diagram.

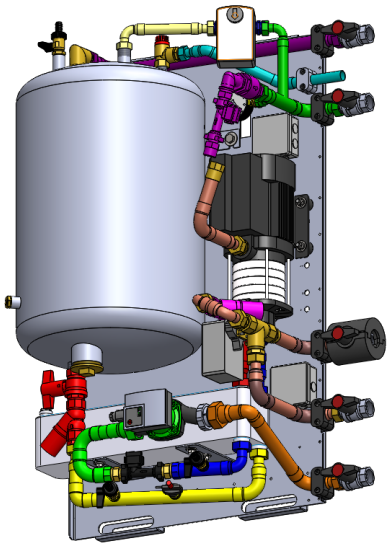

Optiflow M² UNO with heat exchanger, stratification, high height pump

MOUNTING AND CONNECTION

Wall mounting

The Optiflow M² unit is fixed on the wall. Check that the wall is solid and flat before starting the installation.

Optiflow M²DUO with insulation

Mark the location of the station on the wall. Do not forget to allow for the space required for the passage of pipes and electrical components. If the unit is mounted in a corner, allow for a minimum gap of 5 cm.

Screw in the support strip using screws and plugs suitable for the wall material. We recommend using 8mm diameter lag screws. Make sure that the support strip is level.

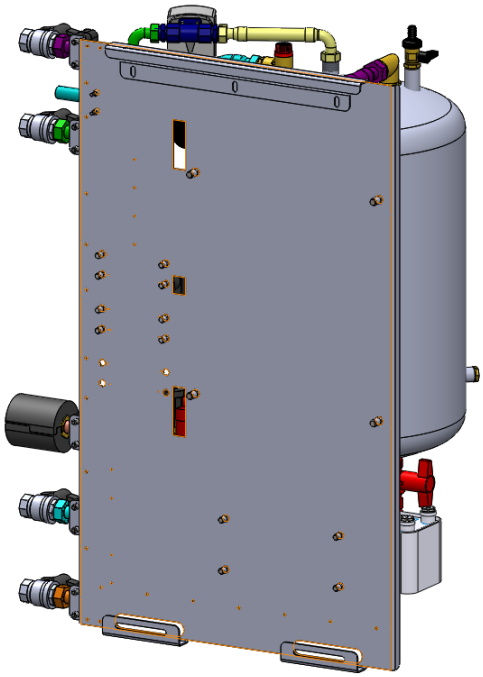

View of the rear panel of the station, at the top the L-profile is inserted into the rail

Place the station on the rail. Then fix the sheet from below in the holes provided. This prevents the station from moving sideways. Once the unit is fixed, place the foam covers to isolate the station. It is important to place them properly after installation and before commissioning in order to protect the various components of the station.

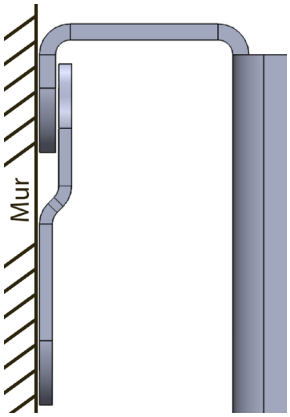

View of the top fixing of the sheet to the wall

Electrical connection

Each station is delivered pre-wired. The individual components are electrically connected and led back to 2 junction boxes in the solar unit. From the boxes, the installer must lead the cables back into a switch cabinet. The power components must be supplied via a suitable power relay.
The power supply of the system must be connected to a 16A circuit breaker dedicated to solar in the electrical cabinet in order to be able to switch off the installation.

On request, we can provide you with a customised wiring diagram for each of your projects.

Caution: Never connect the solar pump before commissioning is complete. When the control system is switched on, the pump control relay may switch on. Dry running of the pump will result in damage not covered by the warranty. Wait until commissioning is complete before connecting the solar pump.

Hydraulic connection

The solar connections between the station and the solar field should be implemented, ideally with a 2% slope, otherwise horizontally, but it's important to avoid any high points to allow efficient drainage. It is important to check that the connection between the panels and the station is made according to the hydraulic diagram. With roof passages, mistakes can quickly occur. To avoid this, one technique is to blow into one of the roof pipes and observe where the air is coming from the solar station.
- The cold pipe coming from the station should arrive at the bottom of the collectors.
- The hot pipe from the top of the collectors should come back into the drainage bottle.

The following are some examples of connection diagrams. We can produce an unvidualised schematic diagram for your project on request.

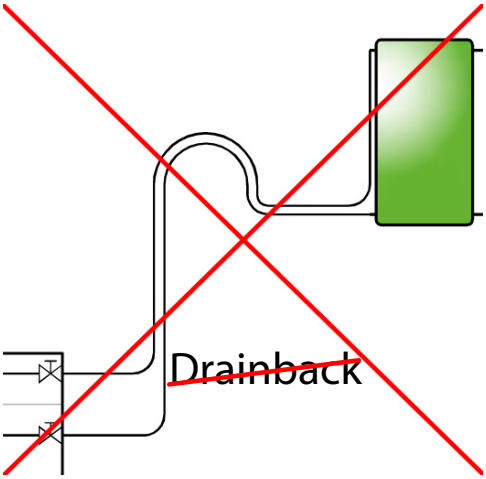

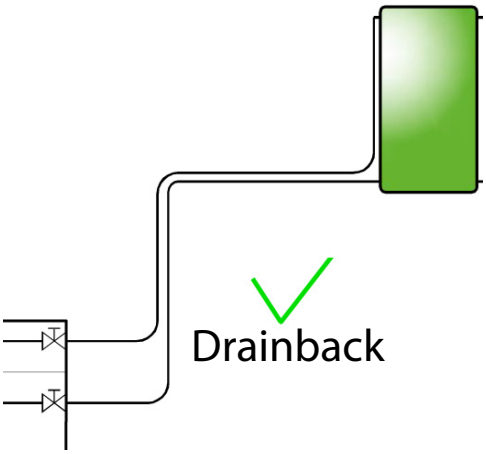

Connection diagram for immersed coils:

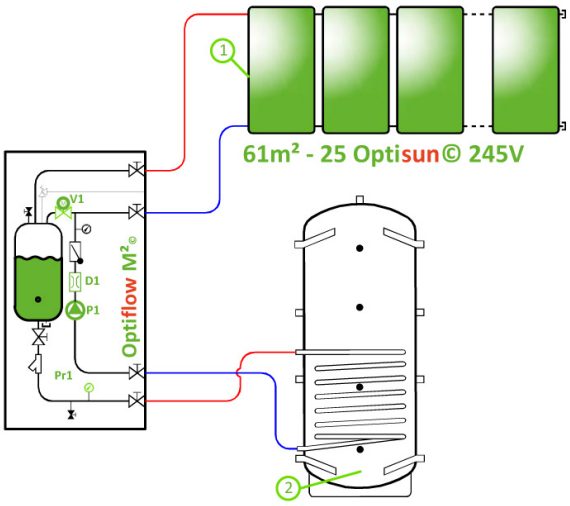

Connection diagram with heat exchanger:

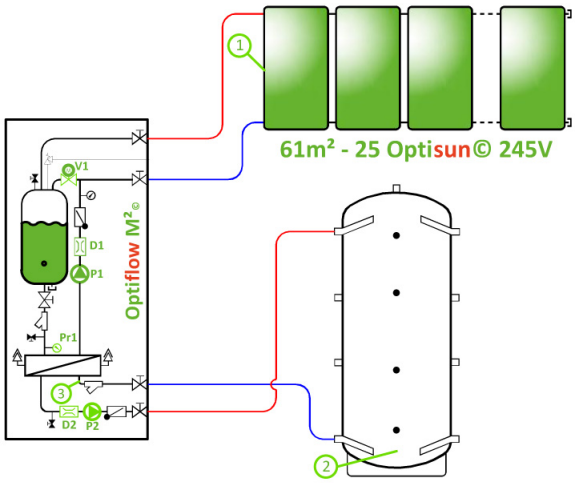

Connection diagram for heat exchanger and stratification valve:

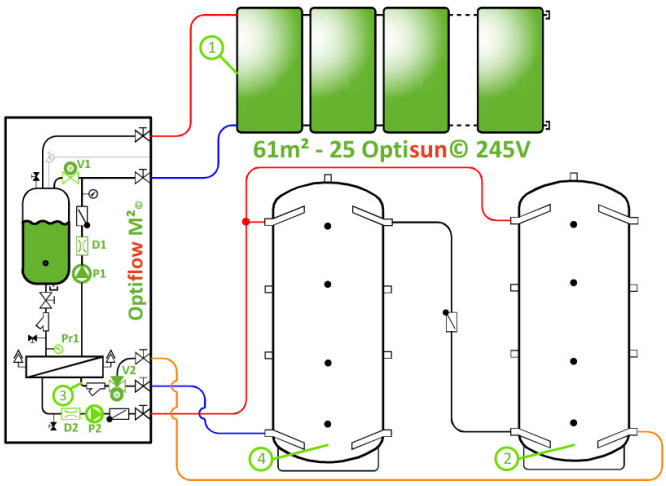

COMMISSIONING

Once the solar circuit is completed, you must follow these steps

1- Flush the pipes

2- Test the sealing of the system

3- Fill the system with solar fluid and charge the starting pressure.

4- Do not turn on the system until the filling is finished.

Flushing

Make sure that the system is flushed. In particular, all metal dust and other consequences of the construction site must be removed. Without flushing, the filter may become clogged and the system may stop working.

Attention: in case of frost, postpone this operation!

Sealing

Fill the system with water using valve A after closing valves B. Put the system under a test pressure of 5 bar for at least 12 hours. Check the various connections/weldings.

Once the seal has been checked, remove the water and use a compressor to bring the Optiflow to 1 bar pressure.

Filling the fluid

Connect your filling pump as shown in the diagram below, close valves B and D and fill with fluid. Play with the drain valve A to keep the system under 2 bar of pressure. When you have finished filling, reduce the pressure to 1 bar by letting the air out through valve A.

Switch on the station. Open valve D and turn on the solar pump, keeping solenoid valve V1 (C) open, to evacuate the last air bubbles in the pump and the exchanger. Check on the flow meter that a flow rate is measured. Switch off the solar pump.

Open the main valves of the Optiflow 2 station to the collector field. The pressure should remain close to 1 bar.

Activate the solar pump and close the solenoid valve V1 (C) for 10 to 15 minutes to allow the network to stabilise. At this time, you should still be able to see liquid (pink) at the low sight glass on the drain bottle. If there is no more liquid, add more to prevent the pump from defrosting.

The commissioning of the primary circuit (solar) is complete.

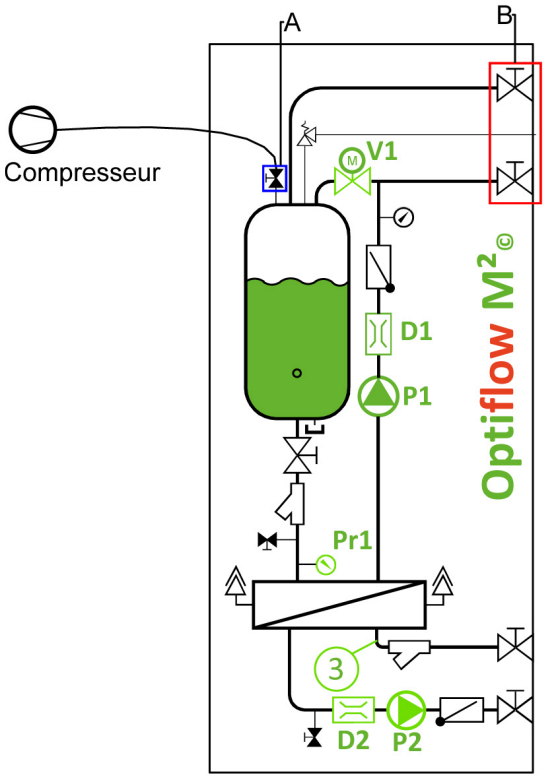

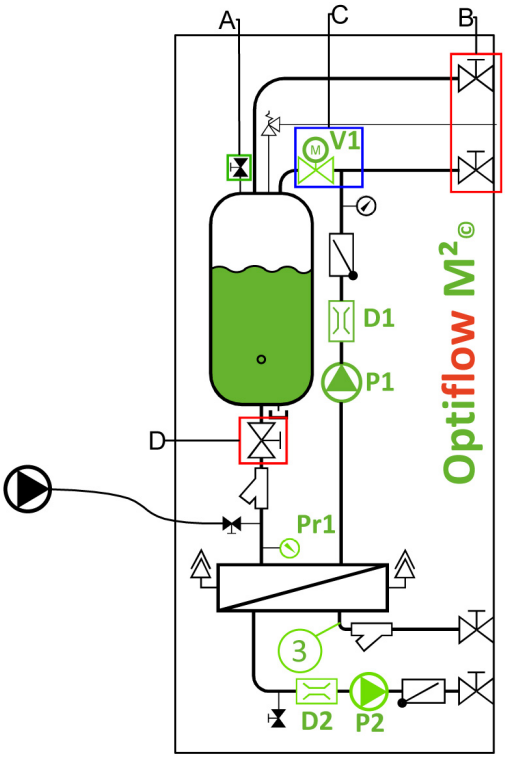

Do not forget to fill in the warranty activation form after commissioning.

Without this document, Sunoptimo will not be able to activate the manufacturer's warranty on the installed equipment.

MAINTENANCE

Regular maintenance of the solar system is essential. Check the following points regularly:

1- Fluid level: During operation you should always see the fluid in the sight glass at the bottom of the cylinder.

2- Pressure in cold: When the collectors are between 20-50°C and the fluid is between 20-30°C with the pump off, the pressure should be between 1 and 2 bar.

3- Flow: Switch on the solar pump and check the flow rate. After the priming phase, the flow rate should never be less than 15l/h per m² of collector.

4- Exchanger: In the case of solar systems for domestic hot water storage, regularly check the level of scale in the plate heat exchanger. If necessary, descale it by removing the sanitary side only and circulating a solution approved by Sunoptimo. (see Optiplate exchanger manual)

5- Filter: At least once a year, remove the filter and clean it. If the filter is very dirty, it is important to ask where the particles are coming from. Contact the installer if necessary.

Nb of collectors	Surface (in m²)	Min. flow (in l/h)	Min. flow (in l/min.)
1	2,44	36,6	0,61
2	4,88	73,2	1,22
3	7,32	109,8	1,83
4	9,76	146,4	2,44
5	12,2	183	3,05
6	14,64	219,6	3,66
7	17,08	256,2	4,27
8	19,52	292,8	4,88
9	21,96	329,4	5,49
10	24,4	366	6,1
N	N x 2.44	N x 36.6	N x 0.61

Tab.7 Minimum flows to check when operating

SUNOPTIMO
your solar heat supplier

You can find this data sheet and all our other documents on our website **www.sunoptimo.com**

Sunoptimo SA - Chaussée de Marche 940E - 5100 Namur (Belgium) | 0032 81588158 - info@sunoptimo.com